Design Criteria

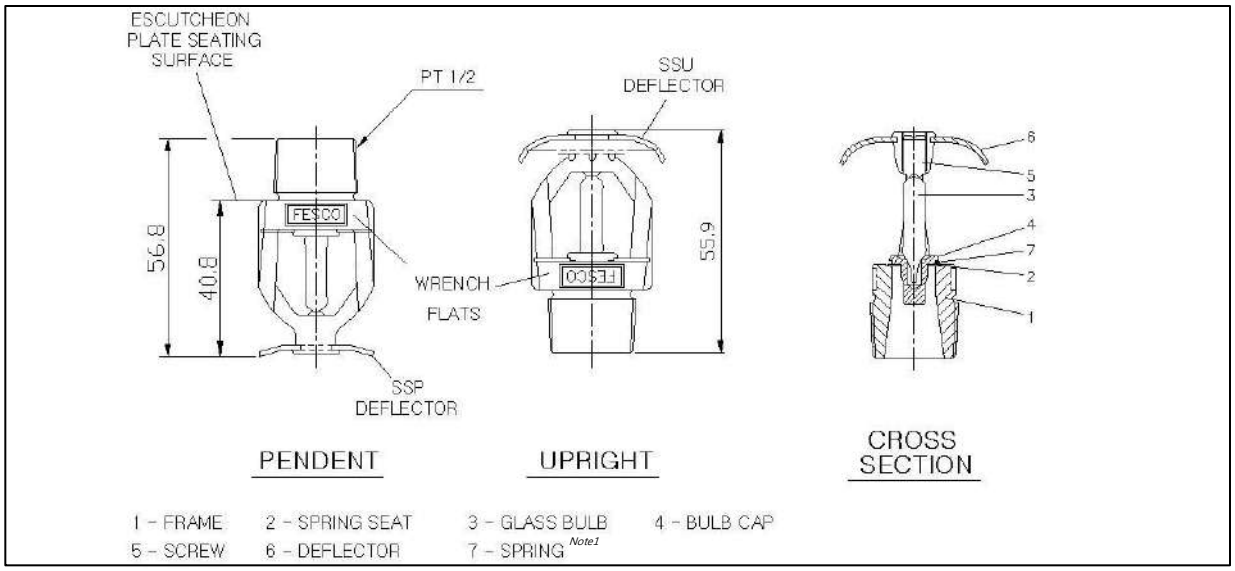

Note. 1. The spring is applied only PI210/PI220/PI221

SIN No	Spray Pattern	Response	Thread Size		Nominal K Factor	Sprinkler Height	Approval
			(N)PT	BSP			
PI 210	Upright	SR	½"	15mm	K 5.6 (US)	55.9mm	$_{C}UL_{US}$, FM Note1
PI 211	Upright	QR	½"	15mm	K 5.6 (US)	55.9mm	$_{C}UL_{US}$, FM
PI 220	Pendent	SR	½"	15mm	K 5.6 (US)	56.8mm	$_{C}UL_{US}$, FM Note1
PI 221	Pendent	QR	½"	15mm	K 5.6 (US)	56.8mm	$_{C}UL_{US}$, FM Note1

Note. 1. The products of UL Listed and FM Approved are not same. Please Contact us to confirm when purchasing.

Installation

The Paradise Industry sprinklers are intended for fire protection systems designed in accordance with the standard installation rules of the applicable listings or approval agency. (eg., NFPA 13 or FM's Loss Prevention Data Sheets)

Note.

Do not install any bulb type sprinkler if the bulb is cracked or there is a loss of fluid from the bulb. And with the sprinkler held horizontally, a small air bubble should be present.
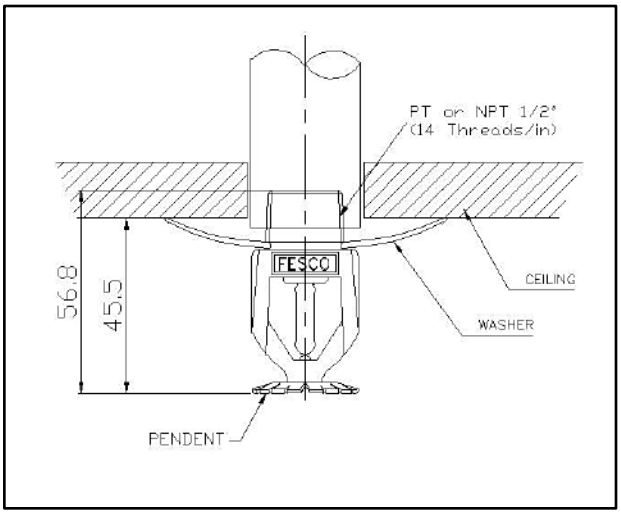
The sprinkler joint should be obtained with maximum torque of 28.5 Nm (21 ft-lbs)